MD-55F

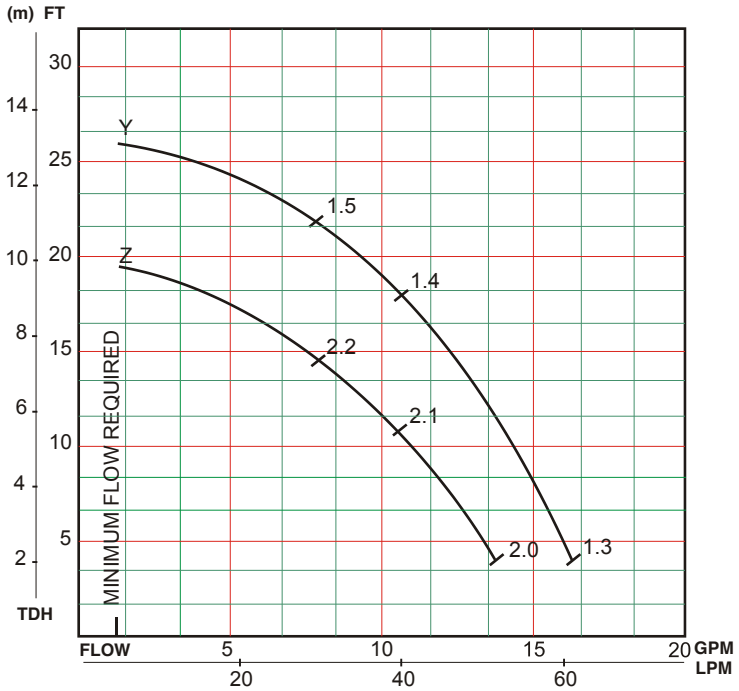

- **Twin bearing system handles thrust loads, extends service life**
- **Hollow rotating / Internal cooling circuit reduces bearing temperature**
- **Compact / Quiet energy efficient design**
- **Few moving parts for easy maintenance**

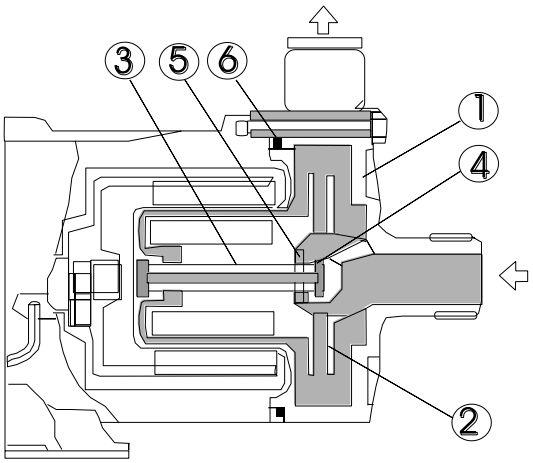

Part	Material
1 Casing	CRFETFE
2 Impeller	
3 Spindle	SiC
4 Bearing	SiC
5 Thrust Ring	SiC
6 O-ring	FKM

Dimensions in inches (mm)

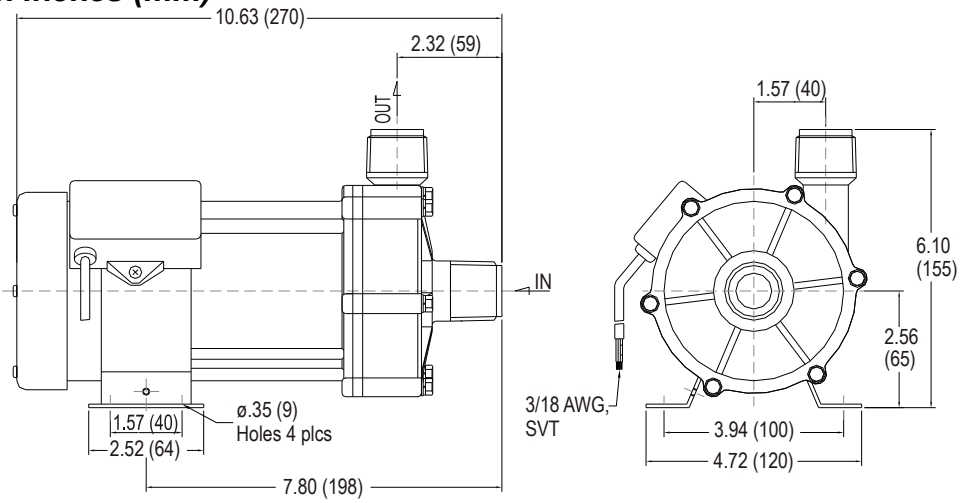

Specifications

Model	CONNECTIONS		MOTOR		AMPS 115V	MAX FLOW GPM	MAX HEAD FT	MAX SYS PRESSURE PSI	S.G.	WEIGHT LBS
	HOSE	NPTM	OUTPUT (HP)	SPEED (RPM)						
MD-55Y	----	1	1/8	3300	1.9	17.1	25.6	21.3	1.3 (1.5)	11.9
MD-55Z	----	1	1/8	3300	1.6	14.5	19.6	21.3	2.0 (2.2)	11.9